PIONEER FAUCETS
STYLE THAT WORKS

3BR300
Brentwood SERIES

Two Handle Lavatory Faucet
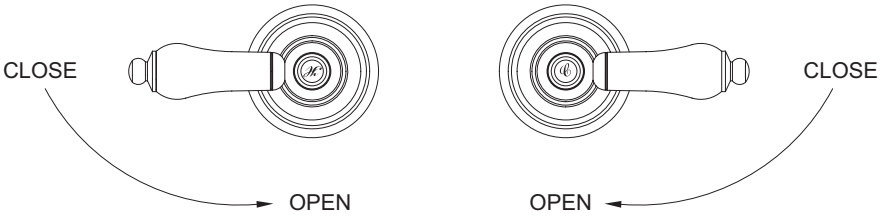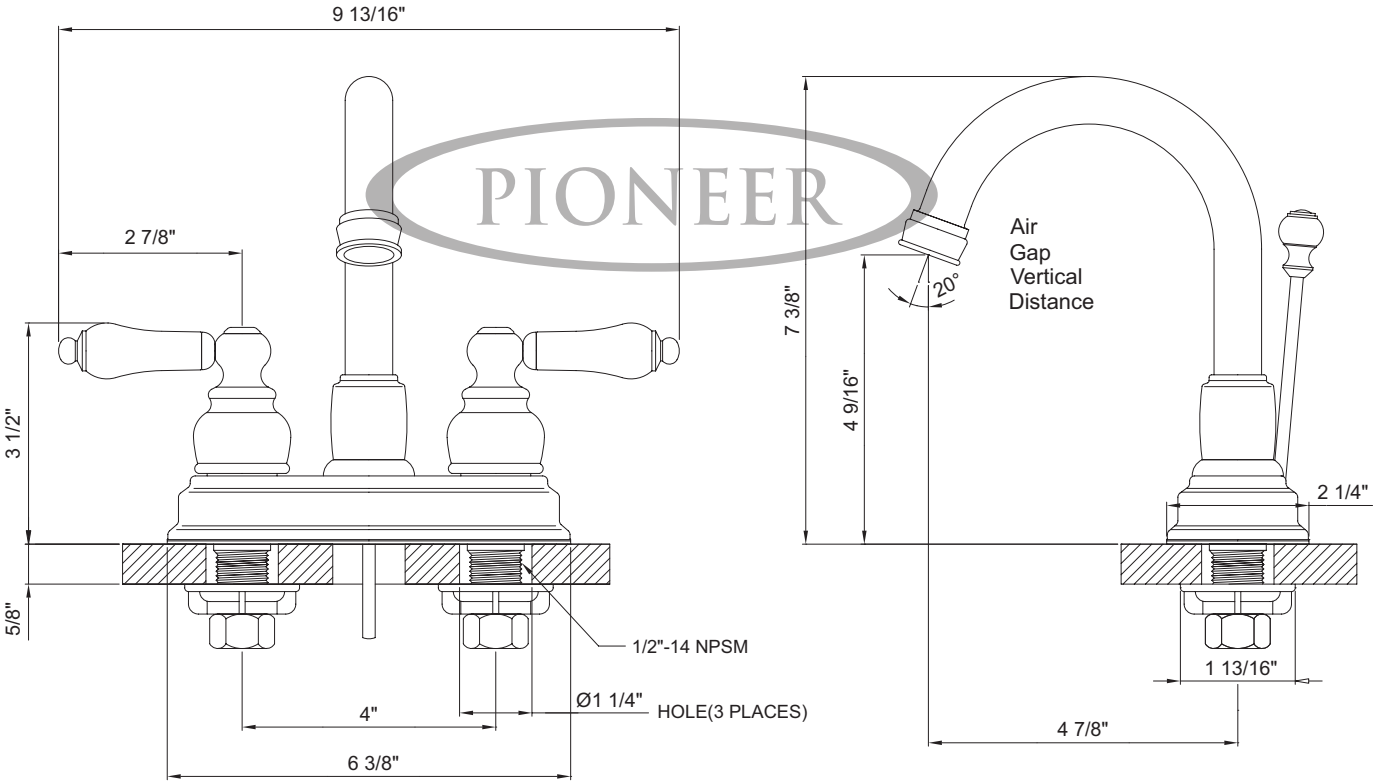
- Metal Lever Handles
- Gooseneck Spout Swivel 360 Degrees
- 4-7/8" Reach, 4-9/16" from Deck to Aerator
- Ceramic Disc Cartridges
- 3-Hole 4" Installation
- Brass Pop-Up Drain Assembly
- With 1.2 GPM Flow Rate