SPECIFICATION SHEET

OLYMPIA

ELITE TWO HANDLE TUB AND SHOWER SET

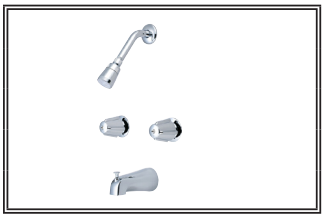

P-1210 SHOWN

Model #: _____

Specific Features: _____

Project Name: _____

Submitted For: _____

Date: _____

- Metal Handles
- 1/2" IPS Inlets
- Compression Stem Operation
- Showerhead, Arm & Flange
- 1/2" IPS Diverter Tub Spout

Model #	Features	Finish	
P-1210*		CP	
P-1211	Tub Set	CP	
P-1212*	Shower Set	CP	

* Showerhead limited to 2.5 GPM Flow Rate

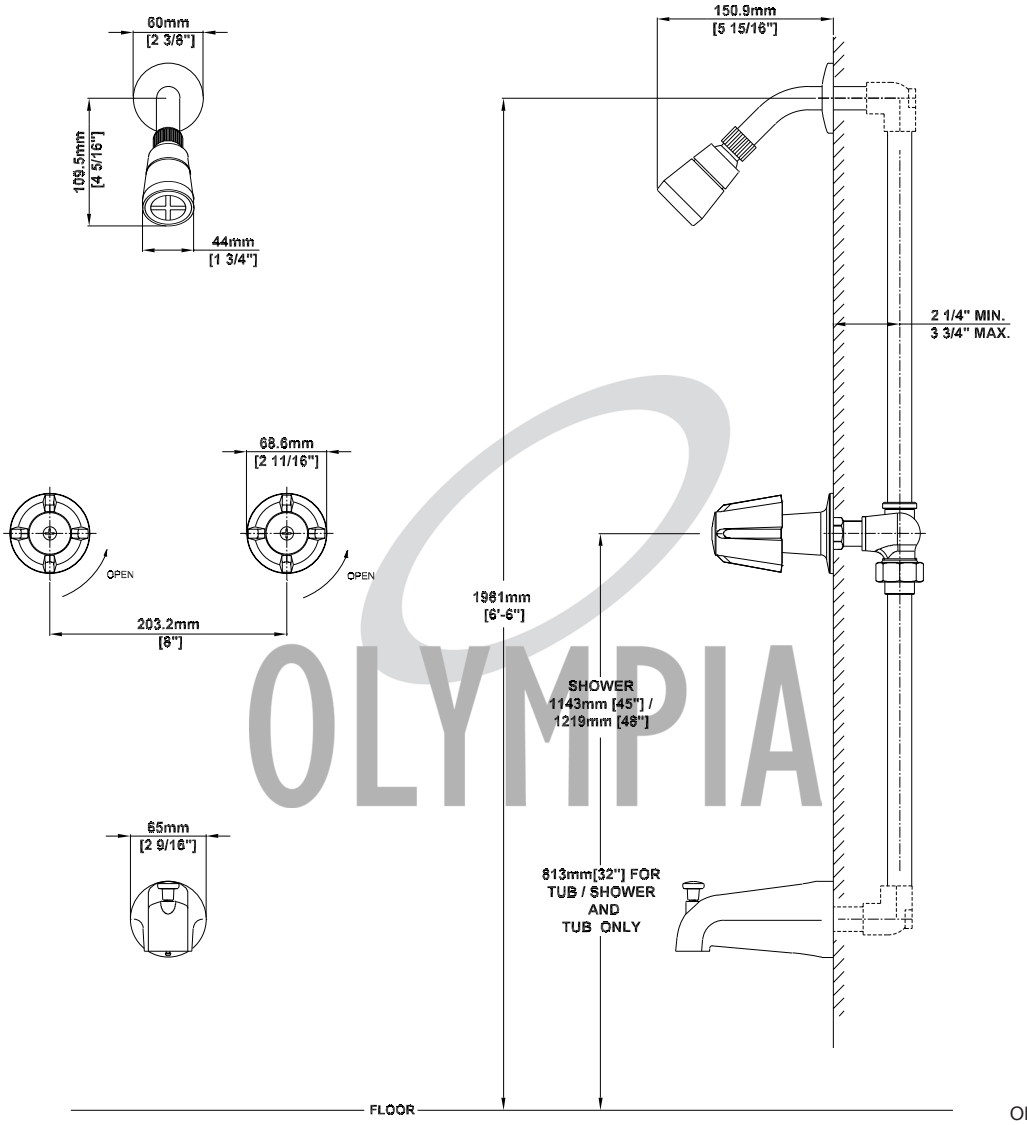

OLYMPIA

Antioch, TN
www.olympiafaucets.com
Olympia Faucets, Inc. © 2009
A Pioneer Industries Inc. Brand
DMSPP-1210/REV. 10.08